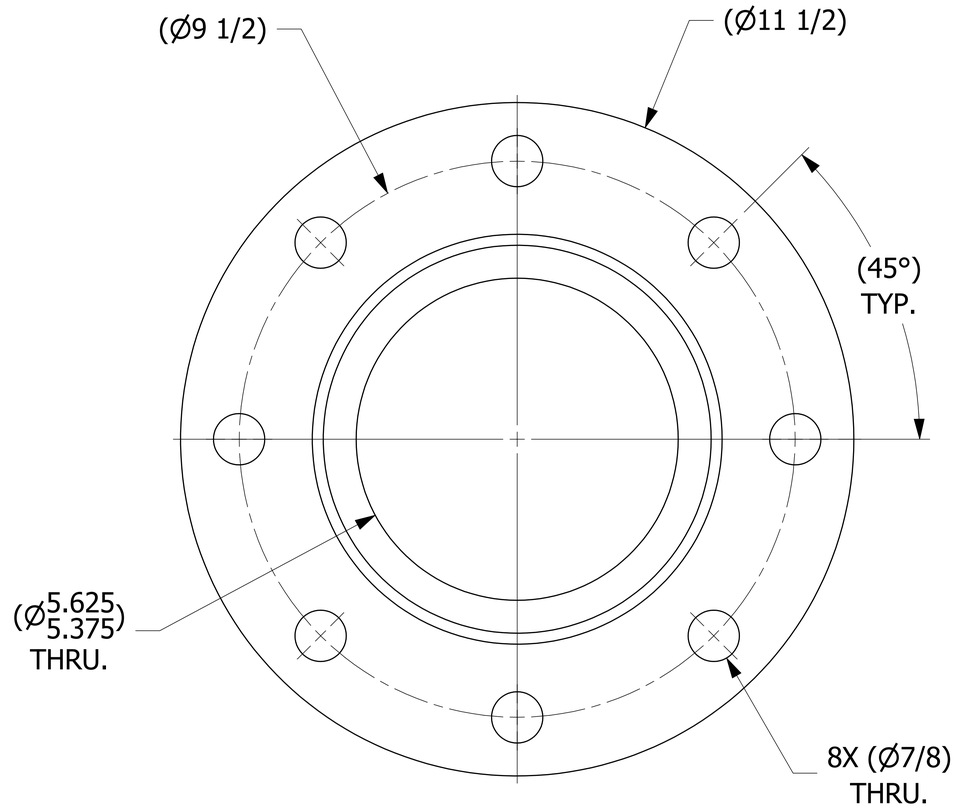

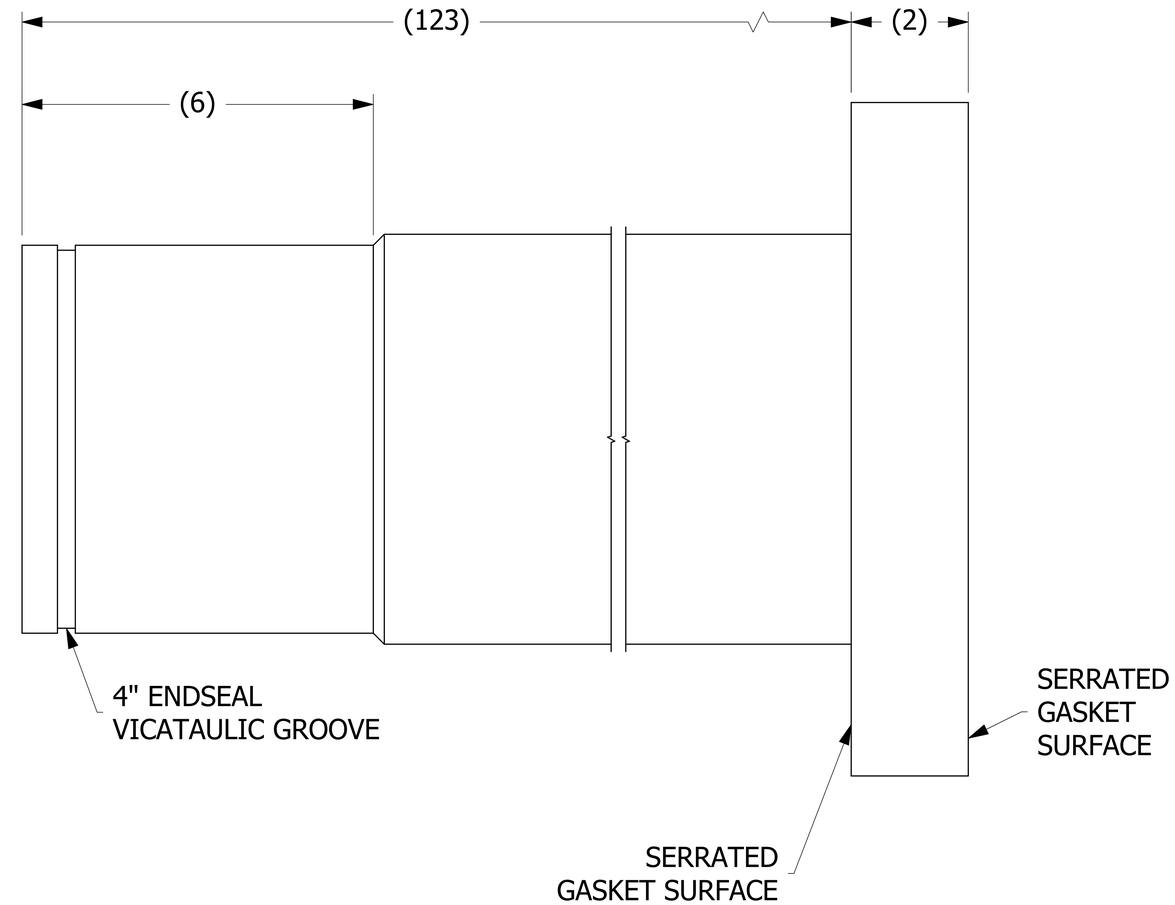

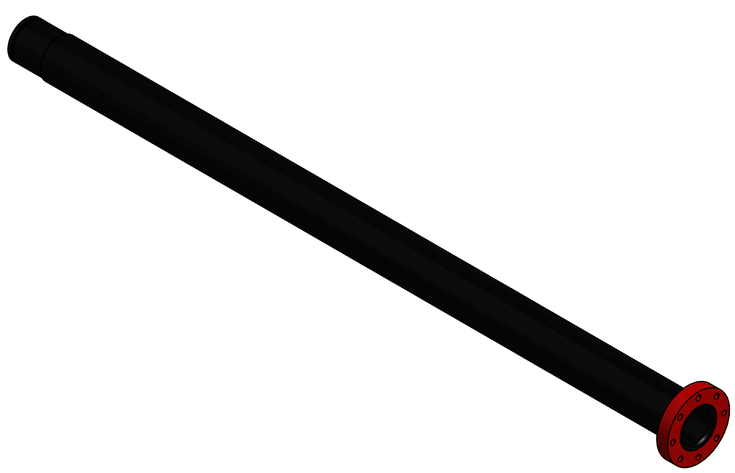

ISOMETRIC VIEW

NOTE:
SOLD TO WORLEY WELDING ONLY.

REV	BY	DATE	DESCRIPTION
B	TAK	9-1-17	UPDATED TITLE BLOCK & DSS 3 NOTE
A	BG	5-24-12	NEW PART ADDED TO THE NETWORK

UNLESS OTHERWISE SPECIFIED DIMENSIONAL TOLERANCES
FRACTIONAL: ±1/16
X.XX: ±.03
X.XXX: ±.015
ANGULAR: ±1°
DEBURR ALL SHARP EDGES.
ALL MACHINED SURFACES TO HAVE A 125 RMS FINISH UNLESS NOTED OTHERWISE.
THIRD ANGLE PROJECTION

DRAWN BY:	CHL
CHECKED BY:	TAJ
PROTOTYPE BY:	CHL
PROTOTYPE DATE:	4/3/2012
APPROVED FOR PRODUCTION BY:	TAJ
PRODUCTION DATE:	5/24/2012

SALCO PRODUCTS, INC.

PART NAME: PIPE STUB 6"

MATERIAL: SALCO PE

PROJECT #: 120402 | SHEET #: 1 OF 1 | SCALE: 1:1

DRAWING #: E32925 | PART #: HS6PST1250

THIS PRINT, PROPERTY OF SALCO PRODUCTS INC, CONTAINS PROPRIETARY INFORMATION AND MUST NOT BE COPIED, REPRODUCED, OR USED DETRIMENTALLY TO OUR INTEREST.

SALES DRAWING SALES DRAWING
SALES DRAWING SALES DRAWING